	Part Name	Material	Plating	Remark
4				
3	Screw	Steel	Ni	M3.5
2	Terminal	Brass	TIN	1/2H
1	Base	PBT		UL94 V0

Current rating	AC250V 10Amp
Insulation resistance	1000M Ohms of More at DC500V
Withstand voltage	AC2000V/Minute
Wire range	AWG #14~22
Torque	6.9 lb-in

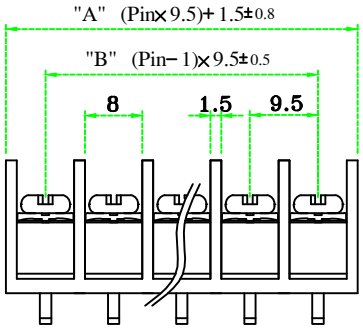

(A Type)
<Standard>

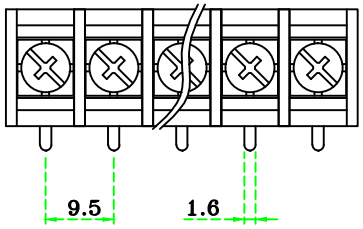

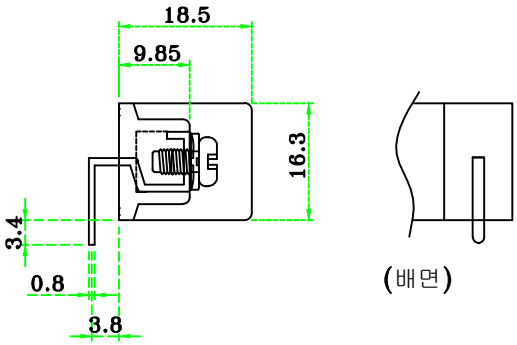

(B Type)

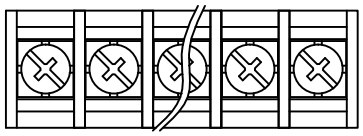

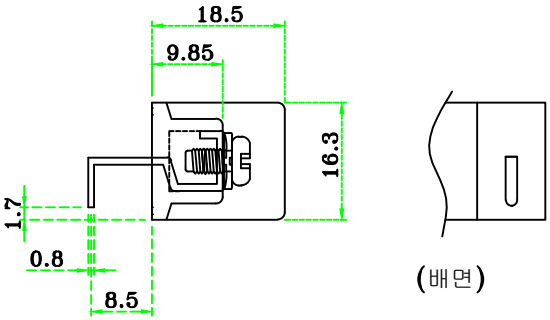

PCB hole Dia: ø2.0

Option.
1. Cover사용시 모델No. : BI-95A-1L(0.8t)-*P

Note.
1. 지시하지 않은 공차: GENERAL TOLERANCES

GENERAL TOLERANCES		
0 ~ 50	±0.5	±1.5°
50 ~ 100	±0.8	
100 ~ 150	±1.0	
150 ~ 200	±1.2	
Scale	/	
Materal		
Finish		

Part Name.	Dwg No.
Terminal block	BI-95A-1L(0.8t)-✳P

Drawing BY.	Checkd BY.	Approval BY.	Sheet No.	of

(주)부일일렉트로닉스
BUIL ELECTRONICS CO., LTD.
www.ebuil.com