| | Part Name | Material | Plating | Remark |
|---|---|---|---|---|
| 4 | | | | |
| 3 | Screw | Steel | Ni | M3.5 |
| 2 | Terminal | Brass | TIN | 1/2H |
| 1 | Base | PBT | | UL94V0 |

| | |
|---|---|
| Current rating | AC250V 10Amp |
| Insulation resistance | 1000M Ohms of More at DC500V |
| Withstand voltage | AC2000V/Minute |
| Wire range | AWG #12~22 |
| Torque | 6.9 lb-in |

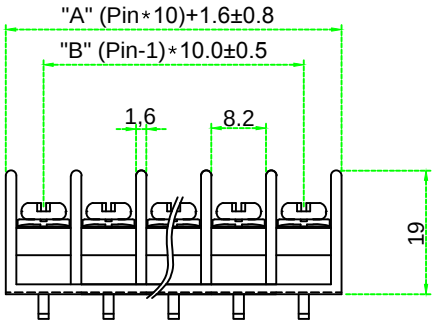


(A Type)
<Standard>

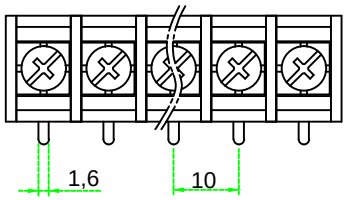


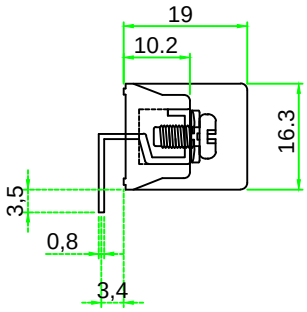


(B Type)

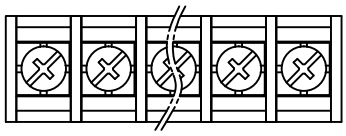

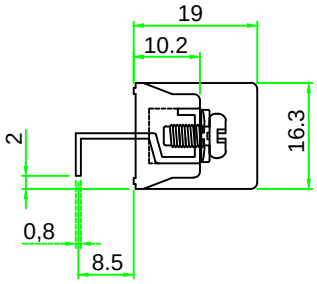


**Note.**

1. **One Mold** 최대 핀수: **20Pin**
2. **Base** 연결용 최대 핀수 : **∞**
3. **Base** 연결용은 마지막에 **End cover** 사용시 **1.4mm** 커짐
4. **Cover** 사용시 모델**No. : BI-10A-1LC-*P(0.8t)_(Option)**
5. 지시하지 않은 공차: **GENERAL TOLERANCES**

**PCB hole Dia: ø2.0**

| GENERAL TOLERANCES | |
|---|---|
| 0 ~ 50 | ±0.3 |
| 50 ~ 100 | ±0.5 |
| 100 ~ 150 | ±0.8 |
| 150 ~ 200 | ±1.0 |
| Scale | / |
| Materal | |
| Finish | |

Part Name.
**Terminal block**

Dwg No.
**BI-10A-1L-*P(0.8t)**

| Drawing BY. | Checkd BY. | Approval BY. | Sheet No. | of |
|---|---|---|---|---|
| | | | | |

(주)부일일렉트로닉스
BUIL ELECTRONICS CO., LTD.
www.ebuil.com